kolpa-san

SHOWER ENCLOSURE DORSA
DUSCHKABINE DORSA

Nr.KA 25

TV2D/S 120,140 1/2

	L 1 (mm)	E (mm)	F (mm)
TVS 120	1170-1250	475-555	593-603
TVS 140	1370-1450	575-655	693-703

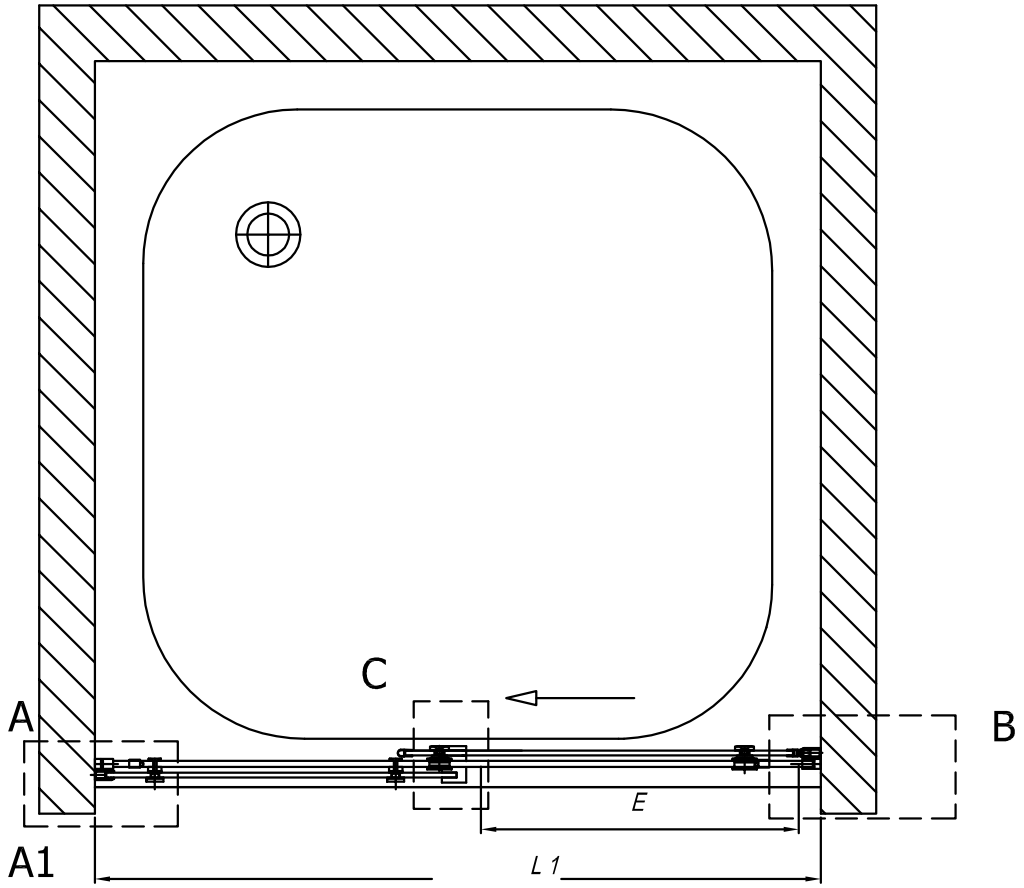

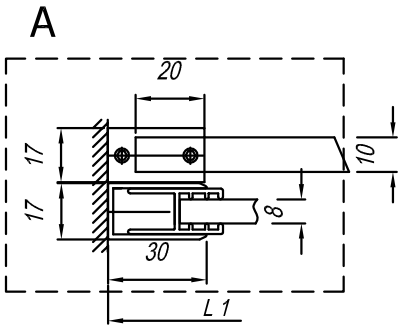

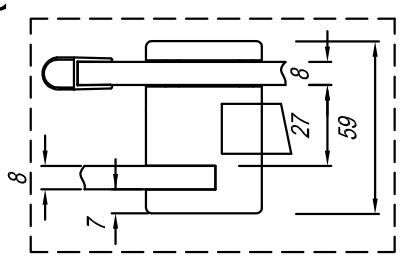

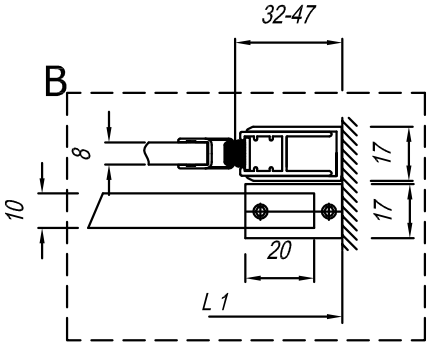

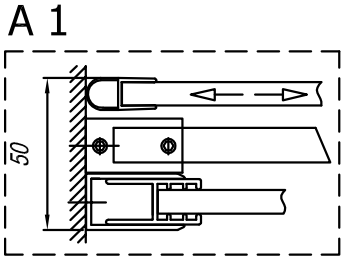

kolpa-san

SHOWER ENCLOSURE DORSA
DUSCHKABINE DORSA

Nr.KA 25
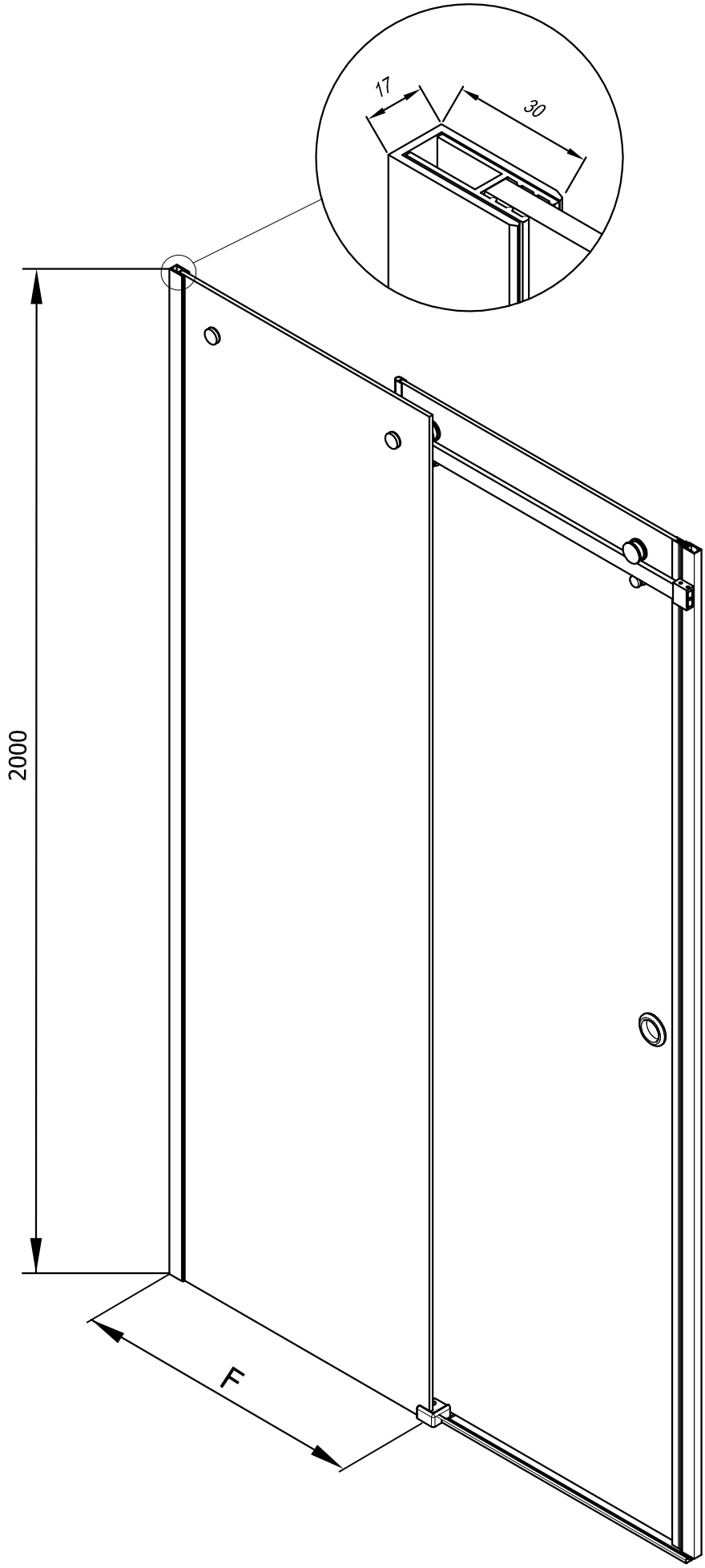
TV2D/S 120,140 2/2