9 240 950

+ 9 240 64x

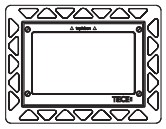

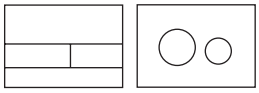

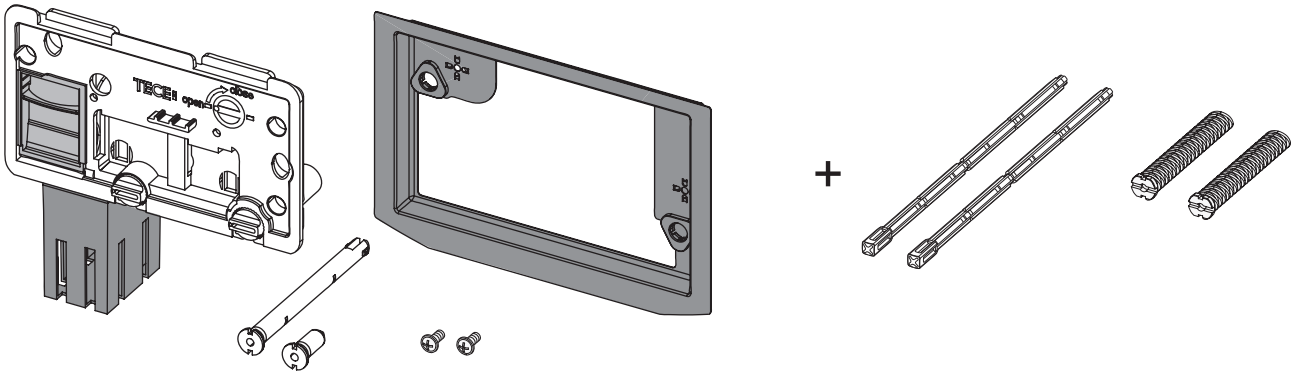

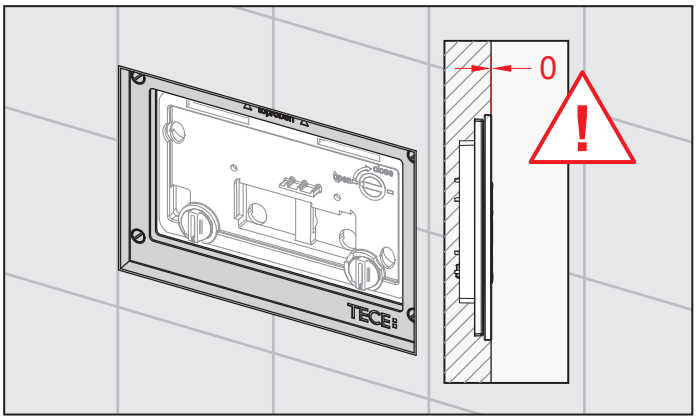

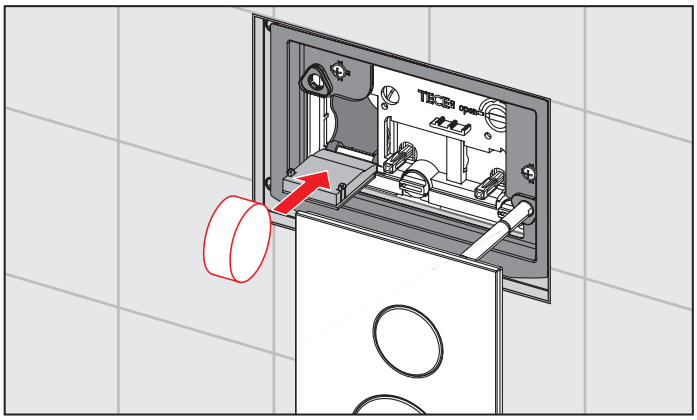

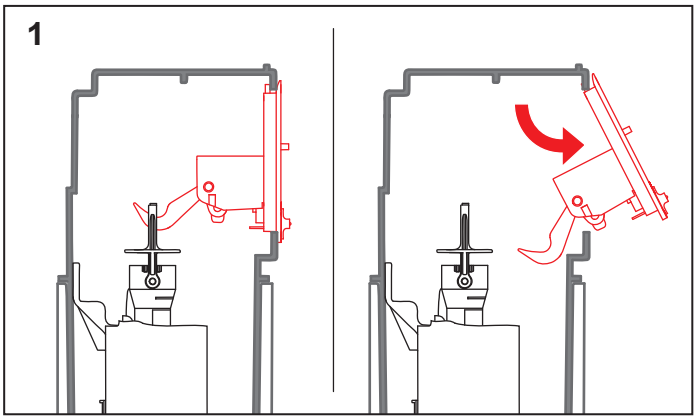

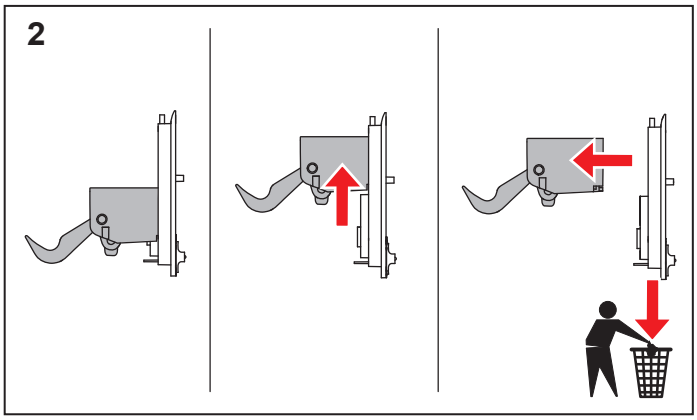

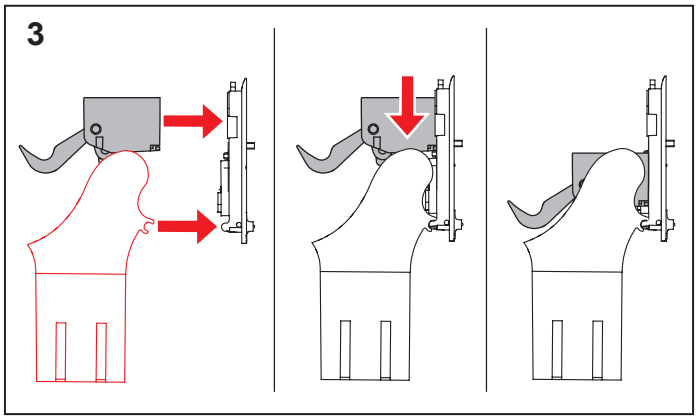

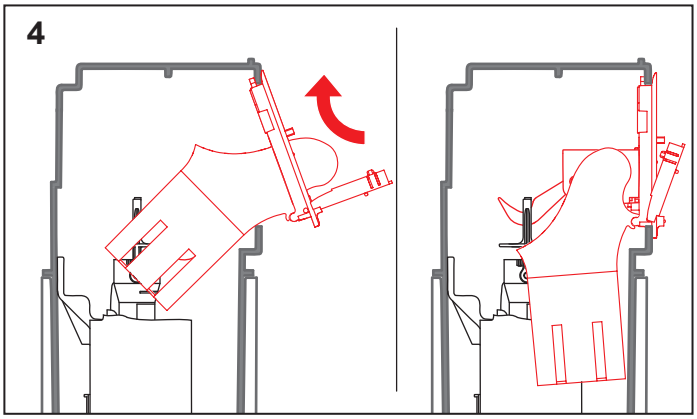

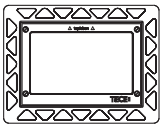

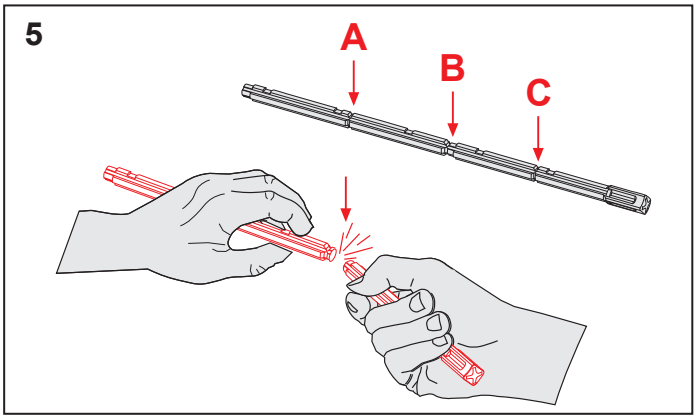
5
A
B
C

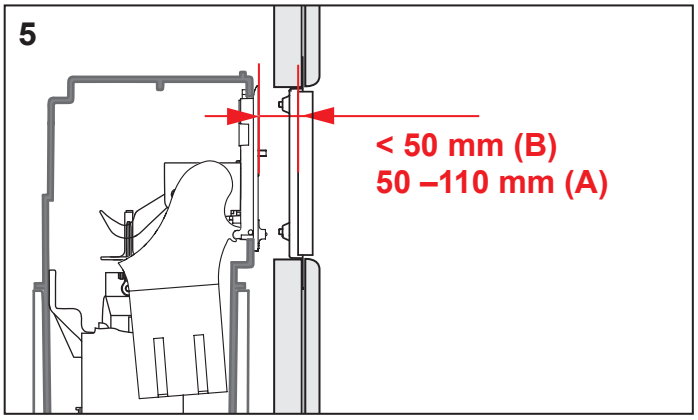
5
< 50 mm (B)
50 –110 mm (A)

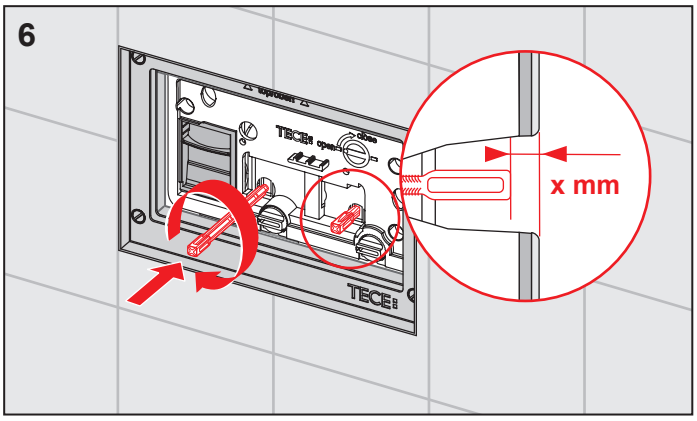
6
x mm

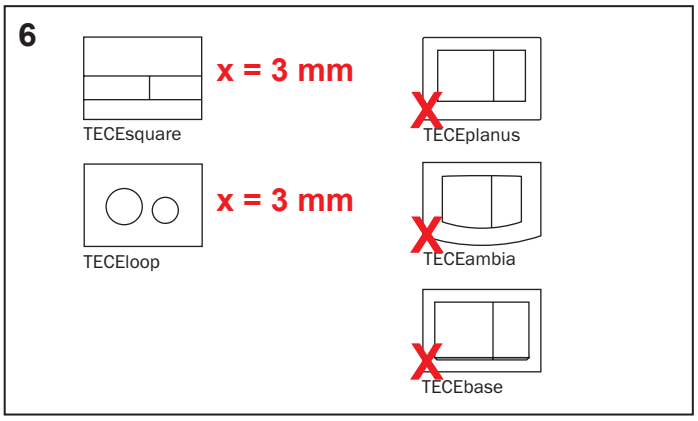
6
x = 3 mm
TECEsquare
TECEplanus
x = 3 mm
TECEloop
TECEambia
TECEbase

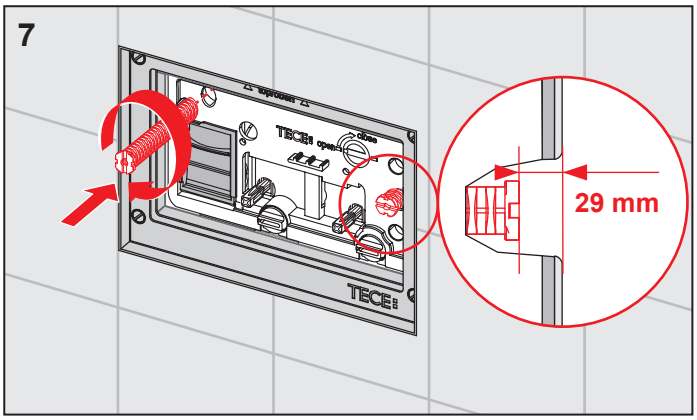
7
29 mm

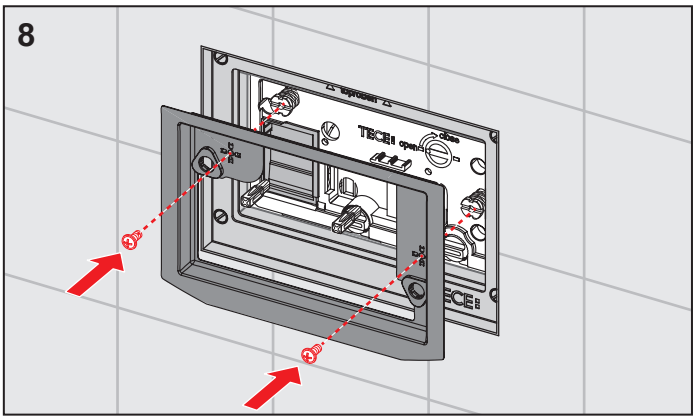
8

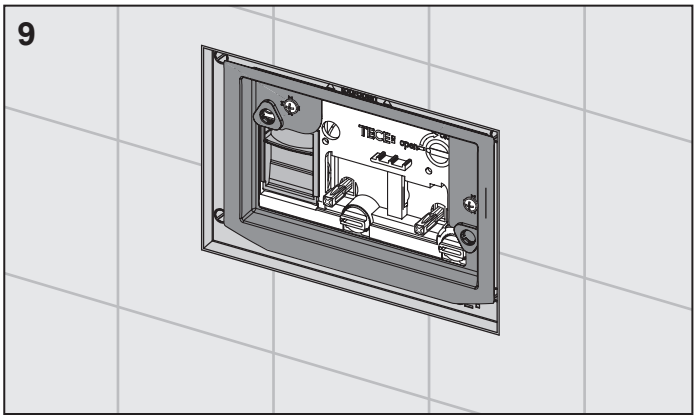
9

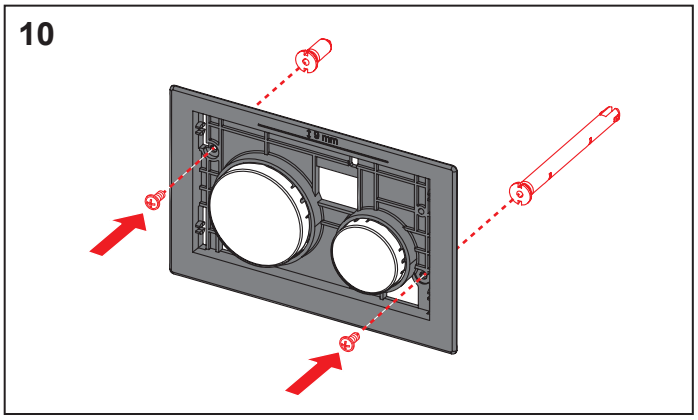
10

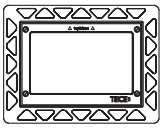

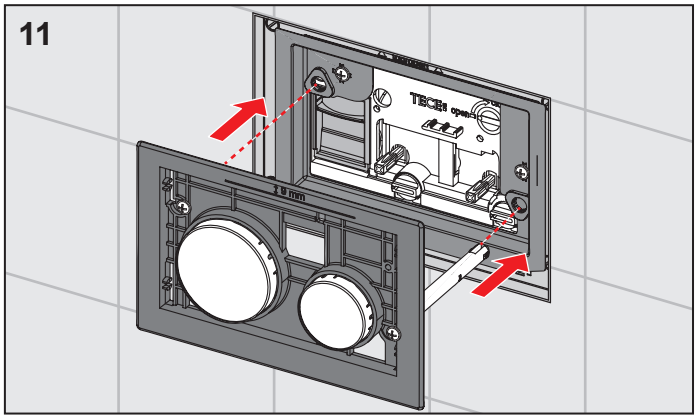
11

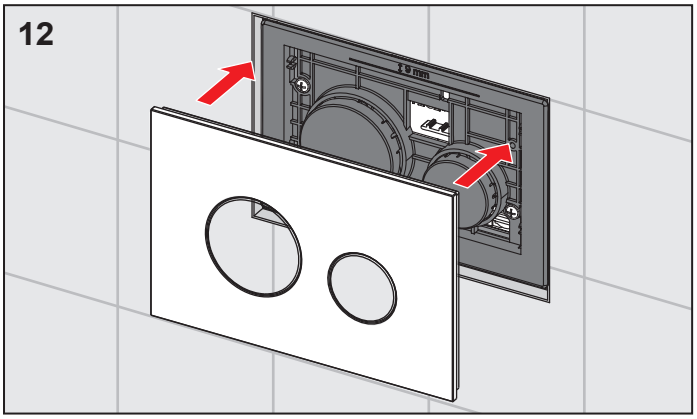
12

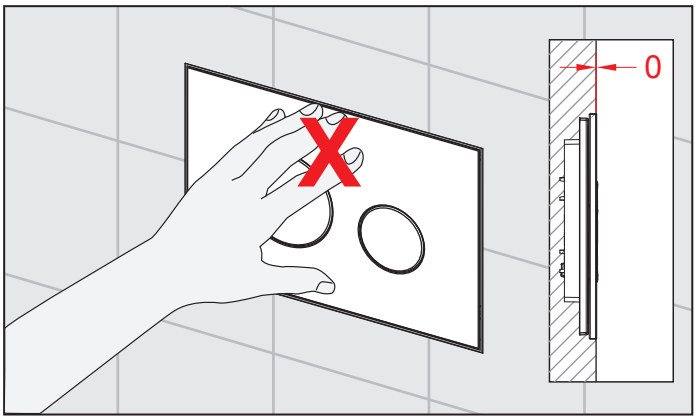
0

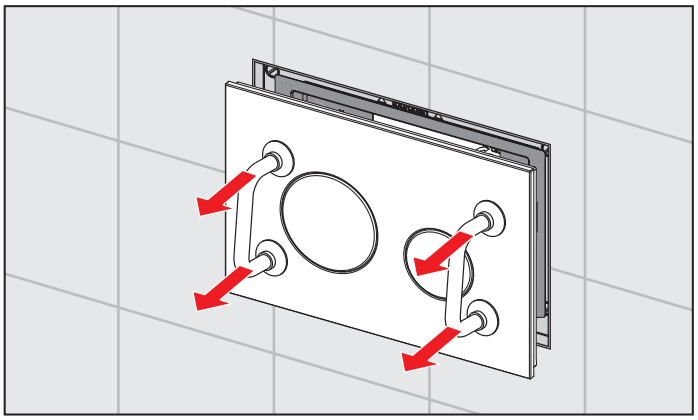

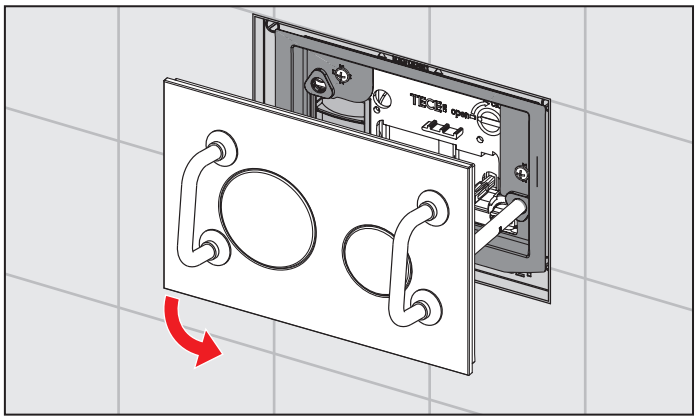

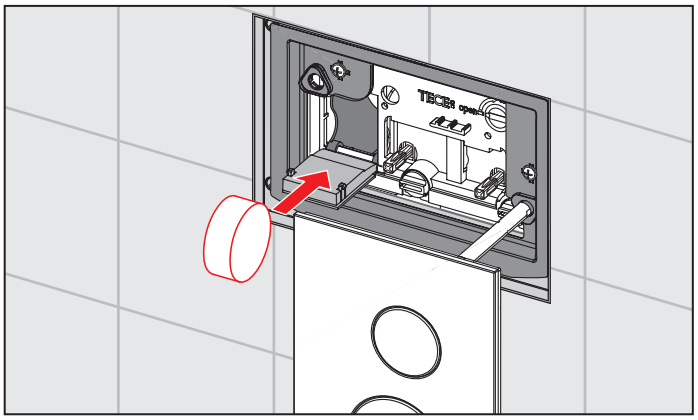

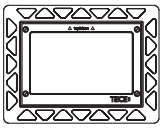

SP430 074 00 c